MXC LADY 14"
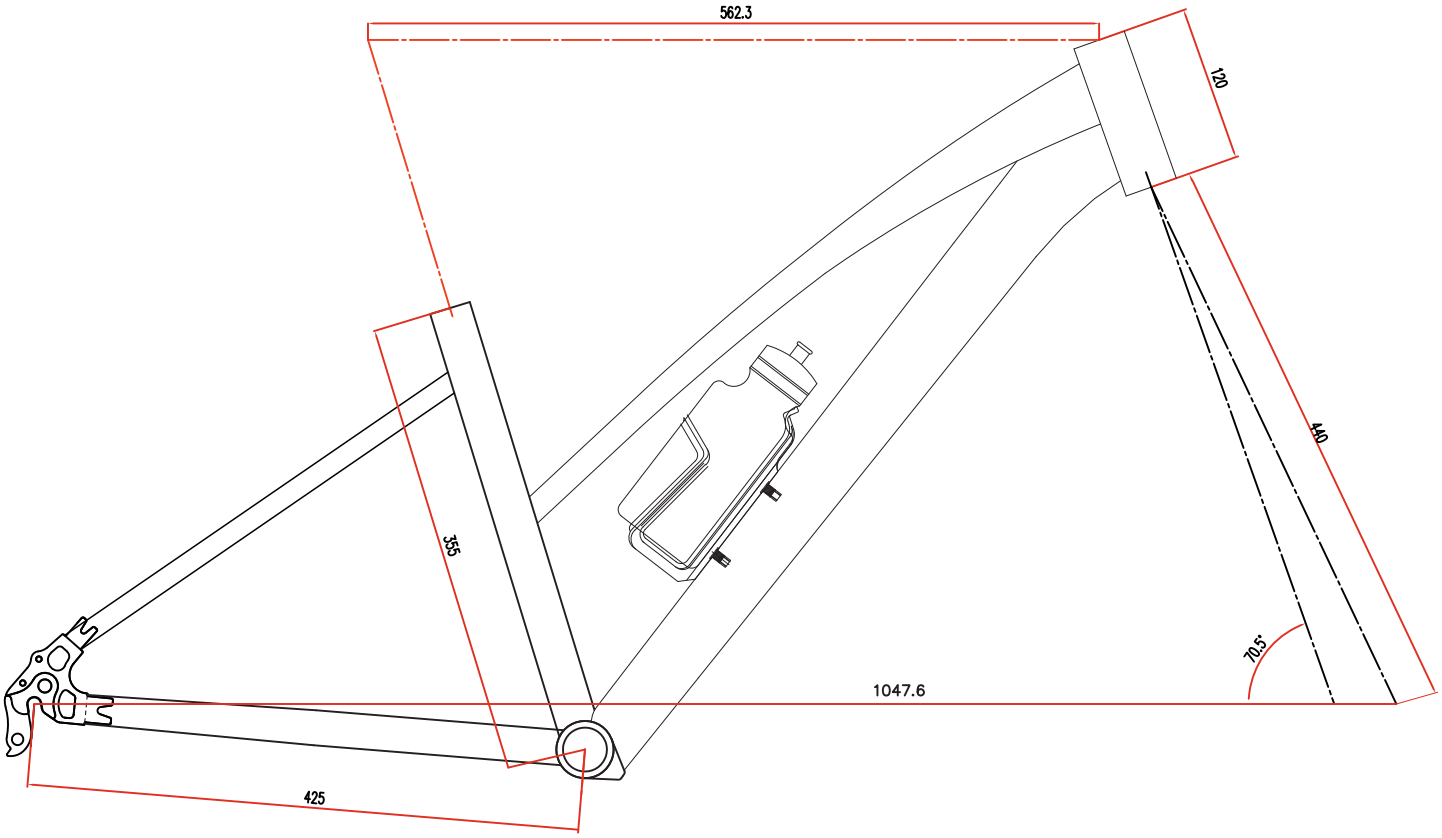
LEADER FOX