AWAY, DAFT, VIATIC, TOSCANA LADY 20" 2021

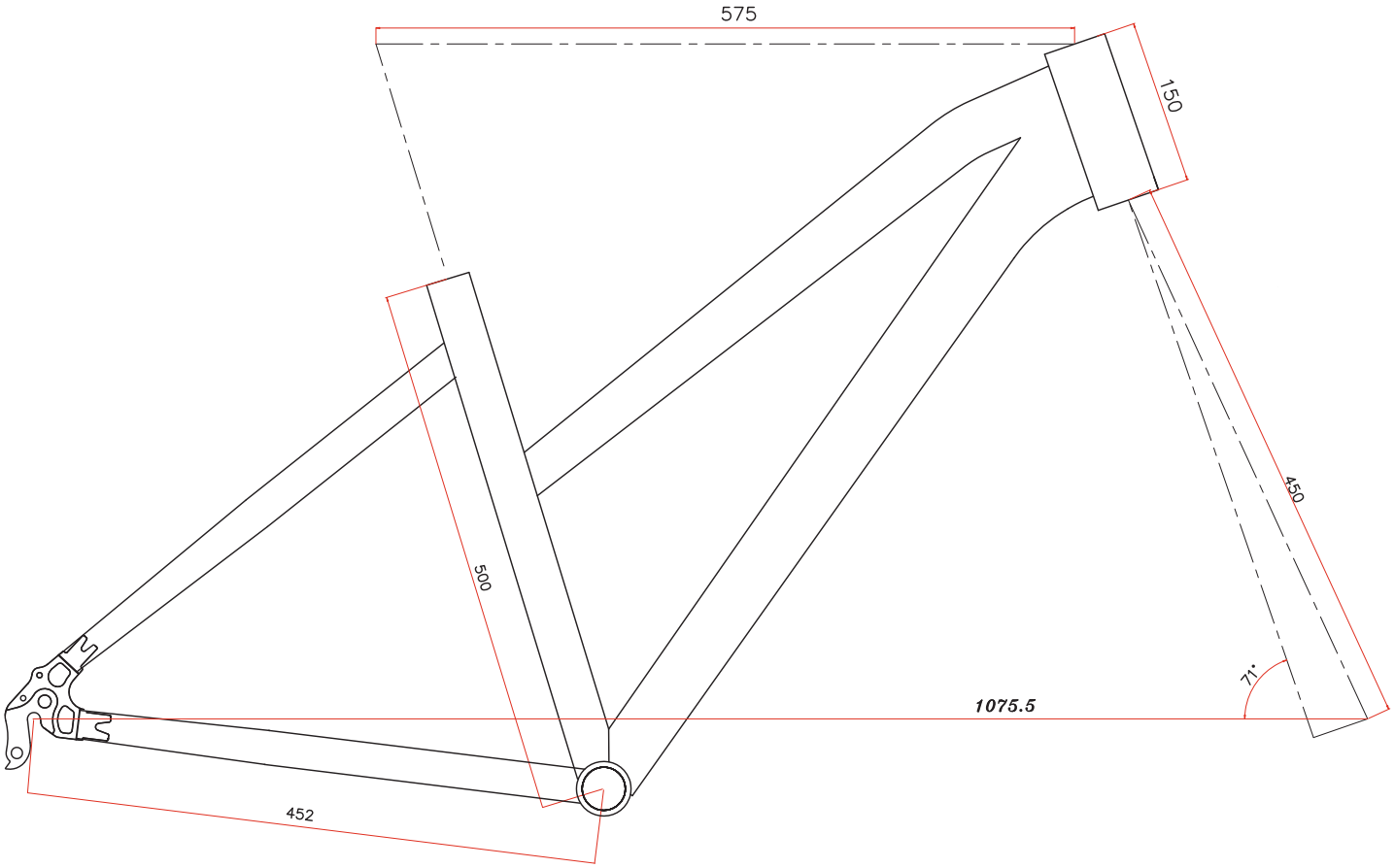

LEADER FOX