STATE LADY 18"
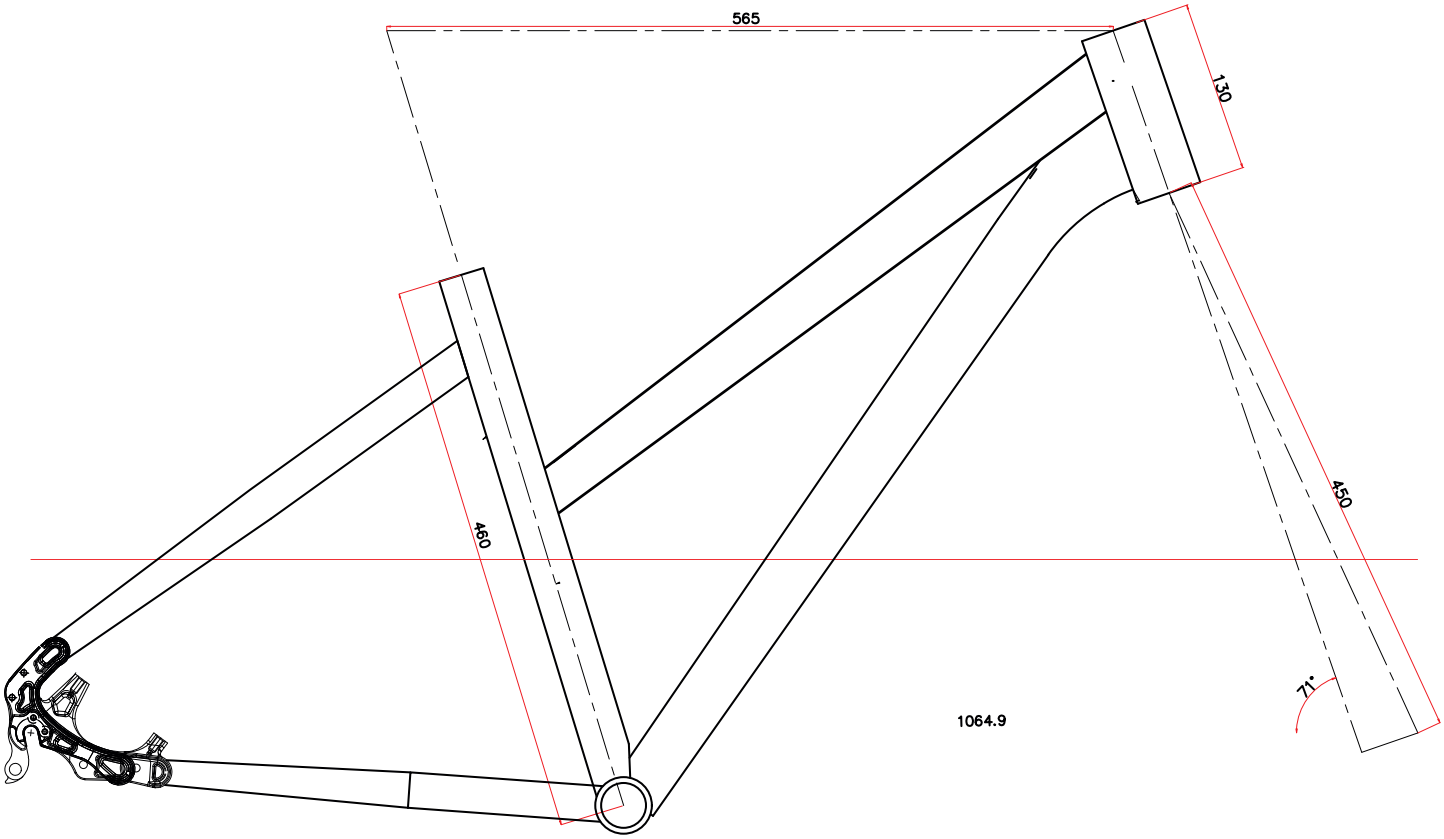
LEADER FOX